Radiometric and Engineering Performance of the SeaWiFS Quality Monitor (SQM): A Portable Light Source for Field Radiometers

B. CAROL JOHNSON AND PING-SHINE SHAW

Optical Technology Division, National Institute of Standards and Technology, Gaithersburg, Maryland

STANFORD B. HOOKER

Laboratory for Hydrospheric Processes, NASA/Goddard Space Flight Center, Greenbelt, Maryland

DON LYNCH

Reyer Corporation, New Market, Maryland

(Manuscript received 26 March 1997, in final form 8 October 1997)

ABSTRACT

A portable and stable source of radiant flux, the Sea-viewing Wide Field-of-view Sensor (SeaWiFS) Quality Monitor (SQM), was developed as a field instrument for use in experiments away from the calibration laboratory such as those encountered during oceanographic cruises. The SQM monitors the radiometric stability of radiance and irradiance sensors during these field experiments; a companion paper gives results acquired during the third Atlantic Meridional Transect cruise. In conjunction with laboratory calibration sources, the SQM can be used to transfer the calibration to the field experiment. Two independent lamp assemblies generate three flux levels, and the lamps are operated at constant current using active control. The exit aperture of the SQM is large and homogeneous in radiance. The SQM was designed to approximate a Lambertian radiator. An internal heater provides operational stability and decreased warmup intervals, which minimizes lamp hours. Temperature-controlled silicon photodiodes with colored-glass filters monitor the stability of the SQM, which is better than 1%. These independent monitors, which are integrated with the SQM, provide information on the flux from the SQM and can be used to normalize the output from the field radiometers during the experiment. Three reference devices, or fiducials, which are designed to mimic the optical surfaces of the field radiometers but are not functioning detector units, are used in place of the field radiometers to produce baseline monitor signals. The front surface of the fiducial is protected when not in use and kept clean during the field experiment. The monitor signals acquired using the fiducials provide additional information on the radiometric stability of the SQM. A kinematically designed mounting ring is used on both the field radiometers and the fiducials to ensure the devices being tested view the same part of the exit aperture each time they are used.

1. Introduction

Experience with the Coastal Zone Color Scanner (CZCS) and other satellite sensors of radiant flux has underscored the importance of sustained and coordinated programs to verify sensor calibration and derived products (Evans and Gordon 1994). This is especially important as more rigorous specifications of measurement accuracies are required to address the geophysical and biological problems identified by the science community. As a second-generation ocean color instrument, the Sea-viewing Wide Field-of-view Sensor (SeaWiFS) offers a variety of design improvements over the CZCS (Hooker et al. 1993), and the SeaWiFS Project calibration and validation program is designed to verify that the scientific objectives are accomplished (McClain et al. 1992).

The ultimate goals of the SeaWiFS calibration and validation program are to 1) ensure internally consistent in situ radiometric observations for bio-optical algorithm development and satellite sensor calibration and 2) ensure that the combination of the sensor's calibration and the atmospheric correction algorithm yields a normalized water-leaving radiance, $L_{WN}(\lambda)$, with a relative standard uncertainty[1] of 5% in clear water regions. The latter goal is particularly important since the primary products of an ocean color mission are $L_{WN}(\lambda)$ esti-

Corresponding author address: Dr. B. Carol Johnson, Optical Technology Division, National Institute of Standards and Technology, Bldg. 221, Rm. B208, Gaithersburg, MD 20899-0001.
E-mail: cjohnson@nist.gov

[1] Standard uncertainties are those evaluated from an estimated standard deviation for a normal distribution (Taylor and Kuyatt 1994).

© 1998 American Meteorological Society

Unauthenticated | Downloaded 04/27/26 02:09 AM UTC

mates; all other derived quantities, such as pigment concentrations and attenuation coefficients, are computed from them (Hooker and Esaias 1993).

Providing $L_{WN}(\lambda)$ estimates with a relative standard uncertainty of 5% requires field instruments with a relative standard uncertainty that is on the order of 1%. The factor of 5 between the uncertainties in $L_{WN}(\lambda)$ and the radiometric calibration coefficients is meant to account for the uncertainties in the atmospheric corrections and effects related to long-term stability, wave focusing, temporal variations due to clouds, etc. A complementary activity, shared with the validation program, is the continued refinement of measurement protocols that specify how in situ radiometric measurements are to be collected, both in the laboratory and in the field (Mueller and Austin 1995). Although demonstration of a 1% radiometric uncertainty depends on a variety of factors, including following proper measurement techniques, quantifying the short- and long-term evolution of the absolute calibration of an in situ instrument is probably the most important aspect of a satellite mission that is trying to make use of data acquired at or near the surface of the earth.

The importance of quantifying absolute calibration uncertainties has long been recognized by the SeaWiFS Project, which organized and hosted five SeaWiFS Intercalibration Round-Robin Experiments (SIRREXs) to specifically investigate instrument calibration issues (Johnson et al. 1996). One of the more important results of the SeaWiFS calibration and validation program has been the specification of a portable light source to measure the temporal evolution of the radiometric calibration of the field radiometers used for the in situ measurements. Such a device, the SeaWiFS Quality Monitor (SQM), was built and is described in this paper. Preliminary results for the SQM were reported by Shaw et al. (1997). A companion manuscript to this paper gives a complete description of the use of the SQM during the third Atlantic Meridional Transect cruise (AMT-3) and presents results obtained with field radiometers (Hooker and Aiken 1998).

Currently, many investigators rely on pre- and post-cruise calibrations to determine the temporal behavior of the radiometric calibration coefficients during field deployment, which necessarily assumes any change in the instrument is the result of a linear degradation process. The stresses associated with shipping a sophisticated instrument such as a radiometer and then deploying it in a harsh environment such as the ocean make this assumption highly suspect. A more satisfactory procedure would be to measure the radiometric response of the radiometer 1) before and after each shipment and 2) at periodic intervals during the field deployment, ideally before and after each set of in-air or in-water measurements. The effort associated with this procedure is worth pursuing only if the radiometric stability of the source is on the same order as the desired calibration uncertainty.

2. Design and requirements

The SQM consists of a light chamber, filtered silicon photodiodes, a mounting assembly, and electronics (Fig. 1). The light chamber is cylindrical, with a ring of two sets of eight small halogen lamps mounted inside one end, and an acrylic diffuser, which is protected by glass, at the other end. The current through the lamps is held constant using automated current control. In the center of the end that contains the lamps, three independent monitors, each consisting of a silicon photodiode and two or three colored-glass filters, are aligned to view the back of the acrylic diffuser. The photocurrents from these internal monitors are converted to voltages using custom transimpedance amplifiers mounted behind the detectors. The glass filters and the photodiodes are temperature stabilized using a thermoelectric cooler (TEC) element, a calibrated thermistor, and a commercial temperature controller. The mounting assembly can be attached to the front exterior of the light chamber; the assembly covers and encloses the exit aperture. This fixture is used to kinematically mount a device under test (DUT) to the SQM. With a DUT in the fixture, the complete system is light-tight, which allows measurements to be performed in various illumination conditions.

The design of the SQM was determined by the stability requirement, the assigned role of the SQM in the calibration chain for the field radiometers, and the environmental conditions during operation. The SQM was built to provide diagnostic information for the design of future portable sources and is an engineering model; as such, special provision was made to record certain parameters such as the voltage across each lamp. Because the SQM functions as a field *test set*, and not as an absolute source of radiance or irradiance, the stability of the source and the degree of repeatability of independent measurements with the same field radiometer were the most critical goals. A single optical configuration, consisting of a diffuse and uniform exit aperture, is used with either radiance- or irradiance-measuring sensors. The simple design of the SQM resulted in a compact, portable, and reliable source, as required for use in the field.

Table 1 summarizes the design requirements with respect to the calibration methodology. The items considered were the size of the aperture, alignment of the DUTs, the cost of production, as well as the spatial, spectral, and temporal behavior of the flux. Some items were considered more essential than others, as indicated in Table 1 with numerical weights.

The field radiometric instruments have various optical configurations and sizes and are generally housed in cylindrical containers with the optical interface on one end and the electrical interface on the other. Independent optical channels, each at a different wavelength, are often placed in the same mechanical housing by arranging the optical channels in a symmetric manner on

Unauthenticated | Downloaded 04/27/26 02:09 AM UTC

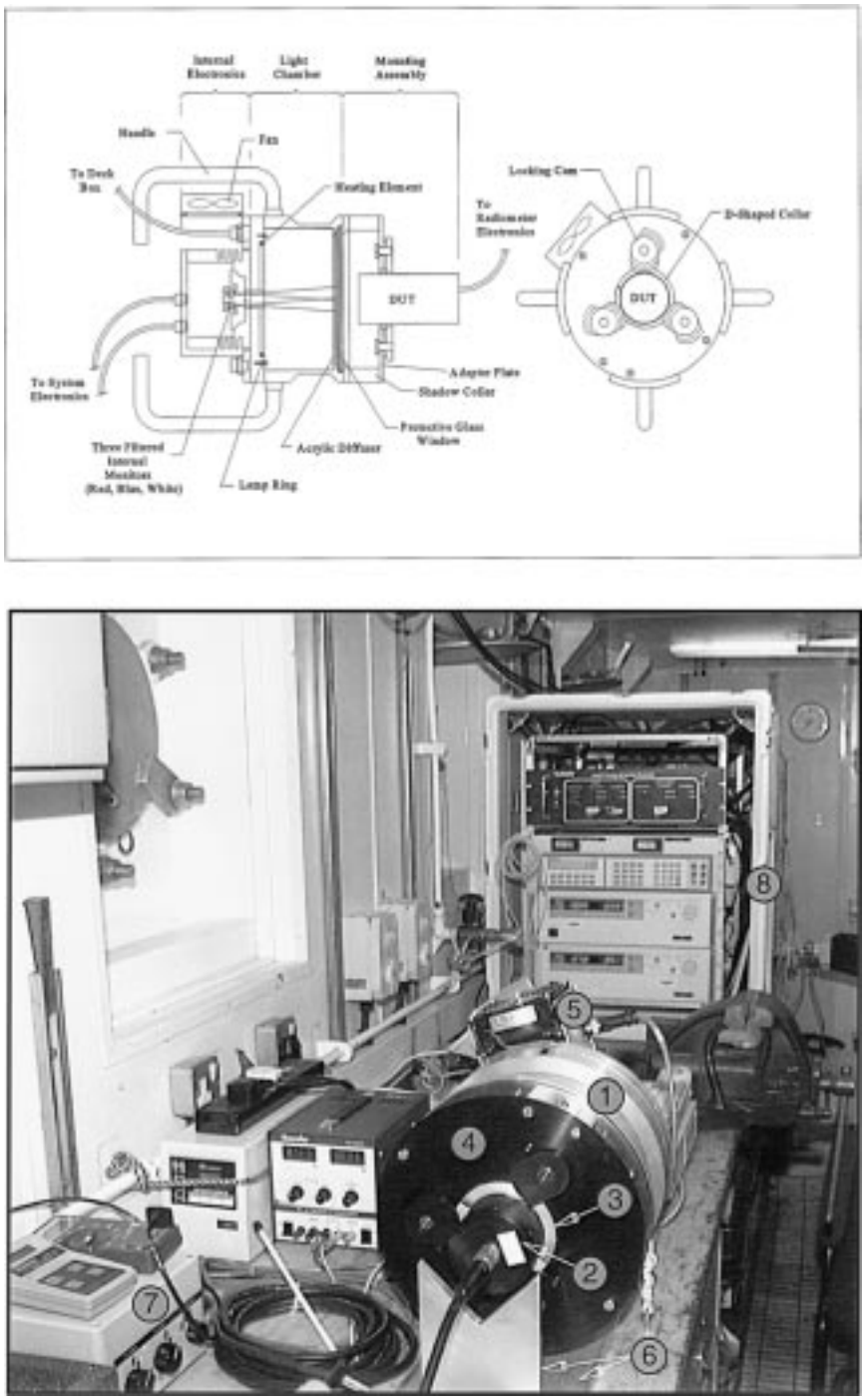

FIG. 1. (a) Side and front view schematics of the SQM. Shown are the mounting assembly (with a DUT) attached to the exit aperture, the light chamber, and the internal monitors. The three transimpedance amplifiers for the internal monitors, the connectors for the system electronics, the fan, and the circuit and connectors associated with the deck box are contained in the section labeled ''internal electronics.'' The deck box and the system electronics are not shown. (b) Photograph taken during AMT-3 in one of the laboratories on board the ship. The main body of the SQM (1) as viewed from the front with a field radiometer (2) and its D-shaped collar (3) installed in the mounting assembly (4). The fan (5) and the SQM mounting plate (6) with the V block attached are indicated. The deck box (7) used to measure the lamp voltages and the SQM temperatures and the shipping rack that contains the SQM system electronics (8) complete the SQM system.

Unauthenticated | Downloaded 04/27/26 02:09 AM UTC

TABLE 1. Design requirements and observed performance of the SQM: calibration methodology.

Parameter	Weight[a]	Specification	SQM design or experience
Diameter of exit aperture	2	22 cm	20 cm
	3	15 cm	
Mechanical coupling for the DUTs	3	Kinematic design	D-shaped mounting ring and radiometer adaptor; DUT V block and SQM base plate
Uniformity in spectral radiance over exit aperture	3	≤5%	4% (peak to valley)[b]
Spectral radiance at 488 nm	3	1.5 μW cm^{-2} sr^{-1} nm^{-1}	0.11 μW cm^{-2} sr^{-1} nm^{-1} to ~1 μW cm^{-2} sr^{-1} nm^{-1}
	2	Higher radiance levels	
Spectral coverage	3	410–900 nm	Fig. 6a
	2	380–1000 nm	
Spectral shape	2	Graybody with apparent blackbody temperature of 3100 K	2300–2400 K at the low lamp setting
Stability of radiometric flux during a single operation interval[c]	3	≤0.1% for up to 4 h after a 1-h warm-up in a ±1°C temperature environment	0.01% (NIST laboratory) 0.33% (AMT-3 cruise)
Repeatability of level settings (if multiple levels are possible)	3	≤1%	0.1% (NIST laboratory)
	2	≤2%	0.34% (AMT-3 cruise)
Cost of system	3	Moderate	Not considered for this engineering model SQM

[a] Weights are defined as 1—optional, 2—desirable, and 3—essential.
[b] These results are for a preliminary, laboratory version of the SQM.
[c] Measurements using the blue SQM internal monitor, the glass fiducial, and the eight 1-A lamps.

the end flange of the cylinder. The exit aperture of the SQM was made to be large enough, 20 cm, so that a variety of DUTs could be measured. The DUTs are kinematically aligned to the exit aperture of the SQM using a D-shaped mounting collar (i.e., a ring with a flat section) and an adapter plate. All six degrees of freedom are constrained and the placement is repeatable.

The variation in spectral radiance across the exit aperture of the SQM was not required to be as uniform as that for a radiance calibration source, making it easier to produce a more compact source. Because of the kinematic design, the effect of any nonuniformity in spectral radiance is always the same on each DUT, whether it is for measuring irradiance or radiance. However, some reasonable amount of uniformity in spectral radiance was desirable because this allows for intercomparisons between different field instruments using the SQM.

The desired spectral radiance of the SQM at 488 nm, 1.5 μW cm^{-2} sr^{-1} nm^{-1}, was determined by the ocean optics protocols for SeaWiFS calibration and validation (Mueller and Austin 1995). Larger values are also acceptable since the saturation radiance for upwelled radiance at 488 nm is 4.5 μW cm^{-2} sr^{-1} nm^{-1} for clear oceans and up to 24 μW cm^{-2} sr^{-1} nm^{-1} for extreme optical conditions. The spectral coverage of the SQM was dictated by consideration of the SeaWiFS instrument, which has channels from 410 to 875 nm. The spectral shape of the SQM was dictated by consideration of the calibration sources, which generally resemble a graybody at around 3000 K. The low apparent temperature of the SQM (Table 1) is caused by the choice of optical components and the operating parameters of the lamps. Consequently, the flux from the SQM, as described here, is not useful for devices with measurement channels less than 400 nm.

The stability and repeatability of the SQM were determined by the overall measurement uncertainty for water-leaving spectral radiance, $L_{WN}(\lambda)$. As mentioned in section 1, $L_{WN}(\lambda)$ should be measured with a relative standard uncertainty of 5%, requiring a relative standard uncertainty of 1% for the radiometric calibration of the field instruments. Therefore, changes in the radiometric calibration of the field instruments should be monitored with a device that does not vary by more than 1% in relative output over the entire field deployment, including pre- and postdeployment laboratory calibrations of the field instruments using absolute standards (at which time measurements may also be made with the SQM). Variations less than 1% are highly desirable, but given the anecdotal evidence within the ocean color community of large variations (more than 10%) in pre- and postcruise calibration coefficients, the value of 1% was viewed as a reasonable objective.

Although not shown in Table 1, the stability requirements cannot be demonstrated or quantified without the internal monitors. The internal monitors are used to record the temporal behavior of the flux and may be used to normalize the output of the field radiometers, so the results are independent of variations in the SQM light field. Three special reference optical surfaces, called *fiducials*, were designed for use with the SQM. The reflectance of the front surface of the fiducials is similar to the various DUTs. The fiducials are used to provide baseline monitor signals, supplying additional information on the temporal behavior of the SQM flux. Without a DUT in the SQM, the internal monitors will be sensitive to radiant flux from the ambient environment.

Unauthenticated | Downloaded 04/27/26 02:09 AM UTC

TABLE 2. Design requirements and observed performance of the SQM: environmental conditions.

Parameter	Weight*	Specification	SQM design or experience
Environmental temperature during storage or shipment	2	−20° to 75°C	Typical of commercial and military aircraft cargo compartments
Environmental temperature during operation	3	0°–30°C	15°–35°C
Atmospheric conditions	3	Wind-blown debris and occasional salt spray	O-ring seals, protective glass window
Input power	3	100–120 V ac; 50–60 Hz; possible noise	Equipment can be configured for other input voltages
	1	240 V ac at 60 Hz	
Orientation	2	Vertical, horizontal, or handheld	Horizontal and fixed during operation
Remote operation	3	Separation of electronics and SQM	Cable length of 23 m
Transport and shipment	3	Routine transport via air and land freight	Repeated transport, with no damage, using custom shipping containers

* Weights are defined as 1—optional, 2—desirable, and 3—essential.

The fiducials offer a constant reference surface and eliminate external sources of light.

The system's cost was determined by consideration of the typical funding profile for an ocean optics principal investigator. It was recognized that the cost had to be moderate, less than $25,000, to ensure that every significant team could deploy a stable field source along with their radiometers. The SQM, as an engineering model, was not subject to this constraint.

Table 2 summarizes the design requirements with respect to the anticipated environmental conditions. The items considered were the temperature during storage and use, atmospheric conditions, input power, mechanical support, field use, and shipping requirements. As with the items in Table 1, most were deemed essential.

The SQM is transported using commercial land and air freight in uncontrolled thermal environments. The allowable storage temperature of the SQM and its associated electronics is determined by the electrical components. The specification in Table 2 is based on the manufacturer's specification for silicon photodiodes and digital multimeters. The actual storage temperatures experienced to date by the SQM are not known precisely but are estimated to be in the range of 0°–50°C. When the SQM is in use, the components will probably be damaged if they attain temperatures below 0°C or above 55°C.

The critical components in the SQM are the three filtered silicon photodiodes. Variations in temperature alter the absolute spectral responsivity of the silicon photodiodes and the spectral transmittance of the colored-glass filters, so the filtered detectors are thermally isolated from the mechanical housing of the SQM and held at 35.00°C ± 0.01°C using the TEC. The range of environmental temperatures for which the SQM can be operated is determined by the requirement to maintain the silicon photodiodes and glass filters at this temperature. If the temperature gradient between the detector housing and the SQM is too large, the temperature control electronics will not be able to maintain the monitor photodiodes at 35°C. Sources of heat flux include the lamps, solar irradiation, and atmospheric advection. As described below, it was necessary to include external cooling by mounting a dc fan to the outside of the SQM to reduce the increased temperature caused by the lamps.

The SQM was designed for routine operation during ocean optics field experiments. Anticipated measurement conditions involve using the SQM on the exterior deck of a ship in close proximity to the field instruments. Conditions can be crowded and, depending on the sea state and the size of the deck, occasional salt spray could fall on the device. Therefore, the light chamber was sealed using o-rings and a protective glass window over the exit aperture. Electrical connections were made using water resistant connectors, and only dc voltages were input to the SQM. Long cables separate the light source from the control electronics, so the electronics can be secured in a ship laboratory. Reusable shipping containers were designed for the SQM and the associated electronics to minimize any damage due to transportation.

Table 3 summarizes the design requirements relating to the accumulation of engineering data or provision for special requirements. The items selected for study were the number of flux levels, optical design, acquisition of ancillary data, repair, and thermal performance.

Three flux levels are achieved by operating the two independent lamp sets with both sets on or only one of the sets on. Flexibility in the flux level enables DUTs with different sensitivities to be used with the SQM. The optical design of the light chamber is modular and different inner surfaces can be used. Baffles can be placed near the lamps. The voltage at each lamp, or the temperature of the SQM, can be measured with a *deck box* (Fig. 1b). The portable deck box contains the appropriate connectors, switches, and electronics for manual measurements of these voltages and temperatures. An electrical heater is installed near the lamp ring to counter environmental advection and shorten the lamp warm-up interval, reducing lamp usage. The heater is also effective at maintaining the SQM temperature when the ambient temperature is low. Finally, certain com-

Unauthenticated | Downloaded 04/27/26 02:09 AM UTC

TABLE 3. Additional factors considered in the SQM design as a result of the engineering model concept.

Parameter	Weight*	Description
Radiometric flux levels	3	Three different levels using the two lamp sets
Lamp baffles	1	Internal baffles can be included
Optical performance	2	External diffuser, glass window, or internal light chamber surface can be changed or modified
Lamp performance	3	Additional electronics and deck box
Mechanical design	2	Replaceable components in the field if necessary
Thermal performance	3	Use of heater element and additional thermistors

* Weights are defined as 1—optional, 2—desirable, and 3—essential.

ponents, such as the lamp ring, can be replaced in the field if necessary.

3. Basic principles

A simple model was developed to determine the overall geometry and arrangement for the lamps; the goal was to produce uniform illumination on the acrylic diffuser. Scattering and reflections from the lamp envelope and base, as well as the light chamber, were ignored. The lamps were modeled as point sources, which assumed that the distance r from the lamp to the diffuser, or output plane, is much greater than the size of the lamp filament. This approximation is valid because lamps with small filaments, on the order of 1 mm, were used. The irradiance at location s, $E(s)$, on the output plane, from a group of N similar lamps was approximated as

$$E(s) \propto \sum_{n=1}^{N} \frac{d}{r_{ns}^3}, \tag{1}$$

where d is the perpendicular distance from the output plane to the lamp plane, and r_{ns} is the distance between point s to lamp n.

The model was used to predict the irradiance distribution for lamps arranged symmetrically on a circle of radius a. The results for eight lamps are shown in Fig. 2. When the output plane is close to the lamps, $d/a = 0.5$, the location of each lamp is in the irradiance distribution and there is a significant minimum in the central area (Fig. 2a). When the output plane is far from the lamps, $d/a = 2.0$, the contribution to the irradiance distribution from the individual lamps is not evident, but there is a central maximum that becomes more pronounced as the d/a ratio increases (Fig. 2b). An optimum solution was determined for this geometry when $d/a = 1.2$ (Fig. 2c). The model predicts a high degree of axial symmetry, and the variability in the modeled irradiance is less than 4% over the central 70% of the reference diameter, which is $2a$.

The effect of the cylindrical walls was also modeled, but the results are not presented here. This simulation indicated that the light reflected from the inner walls of the lamp chamber is about 80% of the flux emitted from the aperture. The radiance uniformity of the SQM is also determined by the lamp alignment, the surface reflectivity of the inner walls, and the transmittance uniformity of the acrylic diffuser.

As a verification of the stability of the SQM, the temporal stability of the illumination of the inside surface of the acrylic diffuser is recorded using the three internal monitors. For each monitor, the signal is proportional to the integral over wavelength of its spectral responsivity multiplied by the spectral radiance at the inside surface of the diffuser. Because of interreflections between the surface(s) of a DUT installed in the mounting assembly and the SQM, the spectral radiance measured by the internal monitors depends on the reflectance of the DUT. The spectral radiance of the exit aperture of the SQM also changes and is related to the spectral radiance measured by the internal monitors by factors that account for the transmission, reflection, absorption, and scatter in the acrylic diffuser and protective glass window. The fiducials are used to provide baseline monitor signals. The front surface reflectances of these DUTs are always carefully maintained during the course of field and laboratory experiments, while the surface reflectances of the field radiometers change because of handling and exposure to seawater. Along with the record of the SQM temperatures, lamp currents, and voltages, the SQM monitor data collected using the fiducials provides information on the factors that affect the output of the SQM.

For example, assuming that the radiometric responses of the monitors and the reflectance of the fiducial are stable, variations in the monitor data using the fiducials indicate instabilities in the spectral radiance of the SQM exit aperture. Factors that affect the spectral radiance include the optical properties of the illuminated surfaces in the SQM and the lamp intensity. Variations caused by the lamps should be reflected in the lamp current and voltage data. If it were necessary to change a component of the SQM, such as the lamp ring, the monitor data collected with the fiducials could be used to relate data from the field radiometers with the two lamp rings.

With a field radiometer for the DUT, the SQM monitor data and the field radiometer data are recorded during the same time interval. If the SQM monitors are stable and the reflectance and responsivity of the field radiometer are constant, variations in the SQM output should cause the same relative change in these SQM monitor data and the field radiometer data. (If the change

Unauthenticated | Downloaded 04/27/26 02:09 AM UTC

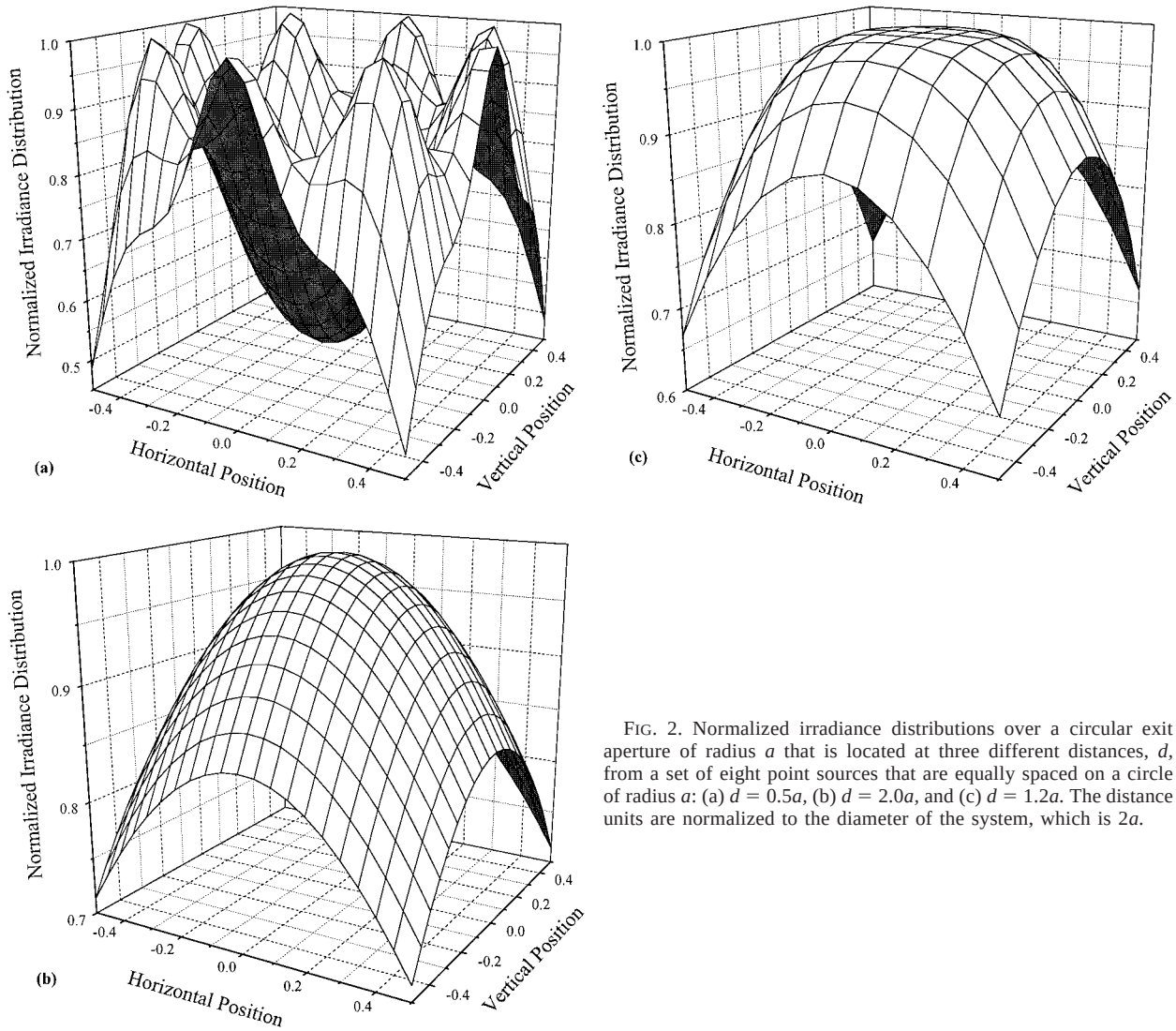

FIG. 2. Normalized irradiance distributions over a circular exit aperture of radius a that is located at three different distances, d, from a set of eight point sources that are equally spaced on a circle of radius a: (a) $d = 0.5a$, (b) $d = 2.0a$, and (c) $d = 1.2a$. The distance units are normalized to the diameter of the system, which is $2a$.

is permanent, the same relative change should also be evident in the SQM monitor data acquired using the fiducials.) To account for possible variations in the SQM output, Hooker and Aiken (1998) normalize the net signals from the field radiometers using the simultaneous SQM monitor signals.

Changes in the reflectance of the field radiometer, but not the reflectance of the fiducial, would produce SQM monitor data that are constant in time for the fiducials but exhibit shifts between the measurement sessions for the field radiometers. The coupling between the SQM spectral radiance and the reflectance of the field radiometer may be adequate to produce a measurable change in the output of the field radiometer. However, quantification of this or other effects associated with the interreflections between the DUT and the SQM was not pursued in the work reported here.

Finally, if the monitor data collected with the fiducials are not constant in time, intercomparisons of data collected with the three independent monitors and one or more fiducials may help identify the reason for the change. The shift may be spectrally dependent (i.e., one or more of the monitors or the spectral shape of the SQM) or spectrally independent (i.e., electronics offset or a mechanical effect).

4. Detailed description

The SQM system (Fig. 1) consists of the SQM, the system electronics (Fig. 3) housed in a shipping rack, the deck box, the mounting assembly for fixing the DUTs to the exit aperture of the SQM, and various electronic cables. The 20-cm-diameter exit aperture is defined by the flange that holds the protective glass window in place. Once the mounting assembly is attached to the SQM, the overall dimensions are about

Unauthenticated | Downloaded 04/27/26 02:09 AM UTC

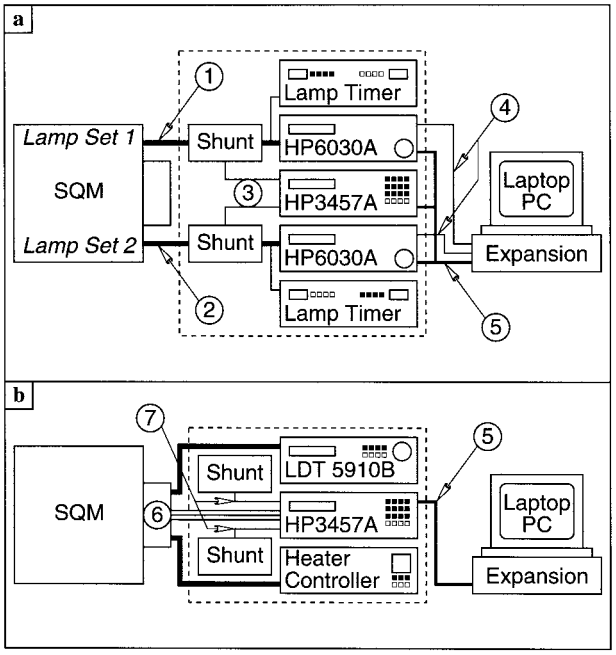

FIG. 3. The system electronics needed to control the SQM are separated into (a) the control of the lamps and (b) the acquisition of the SQM data. For the former, the low power lamp set has its own power supply (HP 6030A) and shunt (1) as does the high power lamp set (2). The shunt voltages (3) are digitized by an HP 3457A DMM and the power supplies are controlled using analog voltages (4) generated by a D/A card in the expansion bay of a laptop PC. The operating time of the lamps are recorded by the lamp timers, and the control software communicates with the power supplies and DMM using a GPIB network (5). For the latter, the HP 3457A DMM digitizes the internal detector voltages (6) and the thermistor resistances mounted on the shunts (7). The heater controller maintains the internal temperature of the SQM, and the TEC controls the temperature of the internal detectors. The items shown within the dashed box are contained within a shipping rack, so the entire system is very portable.

31 cm in diameter by 46 cm in length. Thus, compared to alternative sources, such as integrating spheres, the SQM is compact given the size and radiance uniformity of the exit aperture. For ease of use, four removable handles can be attached to the body of the SQM. A mounting plate can also be attached to the SQM, fixing the longitudinal axis of the SQM and DUT perpendicular to the direction of the earth's gravitational acceleration. The SQM should be used in the same orientation with respect to the gravity vector because the lamp irradiance may vary with this parameter (Early and Thompson 1996).

A high reflectance fiducial, designed to mimic the downwelling irradiance sensors, was made from white Teflon and is denoted as the *white* fiducial. The other two fiducials are integrated together on opposite ends of a black anodized aluminum cylinder. A low reflectance fiducial uses the black anodized aluminum surface and is denoted as the *black* fiducial. The third fiducial has a glass window mounted flush with the anodized surface; this *glass* fiducial introduces additional interreflections between the SQM and the glass fiducial that may be present with the radiometric DUTs. The overall dimensions of the three fiducials are 8.9 cm in diameter and 8.9 cm in length, and the D-shaped collar is integral to the fiducials.

a. Light chamber

The 16 lamps are equally spaced on a 22.9-cm-diameter circle (a = 11.45 cm) and consist of two sets of 8 lamps that are connected in series and operated by separate Hewlett-Packard[2] (HP) model 6030A power supplies. One set is operated at 0.95 A (the maximum rating is 1.05 A at 4.2 V dc) and is from Gilway (model number 187). The other set is operated at 3.1 A (the maximum rating is 3.45 A at 5.0 V dc) and is from Welch Allyn (model number 01160). The approximate 11% decrease in the maximum operating current is meant to increase the lamp lifetime beyond the manufacturer's specifications. The particular lamps were chosen based on color temperature, envelope design, electrical lead configuration, size, and rated lifetime. According to the manufacturer, the lower power lamps have a color temperature of 3000 K and a lifetime of 650 h. The corresponding quantities for the higher power lamps are a color temperature of 3240 K and a lifetime of 550 h.

The lamps are mounted in an annular-shaped, removable lamp ring, and alternate between the low power, (1 A) lamps and the high power (3 A) lamps. The individual bulbs were fixed to tapered aluminum rings using ceramic cement; the mounted lamps are held in the lamp ring assembly using snap rings. Connector wires were soldered onto the leads to the lamp filament after proper preparation of the lamp leads. Every effort was made to fix the axis of the lamp filament perpendicular to the lamp ring assembly; a special jig was constructed for this purpose. However, in some cases the jig was not used, in particular for the data acquired during AMT-3. An annular-shaped circuit board was mounted behind the lamp ring to connect the lamps in each set to the appropriate power supply. The circuit board is also for routing the individual voltages across each lamp filament to connectors on the SQM housing. The connectors mate to cables that attach to the deck box. Extra lamp ring assemblies were made, so if a lamp fails during a field exercise, the entire lamp ring can be replaced.

The aluminum light chamber is the main structural element of the SQM. The handles or the mounting plate can be attached to the SQM at one of four locations

[2] Certain commercial equipment, instruments, or materials are identified in this paper to foster understanding. Such identification does not imply recommendation or endorsement by the National Institute of Standards and Technology (NIST), nor does it imply that the materials or equipment identified are necessarily the best available for the purpose.

Unauthenticated | Downloaded 04/27/26 02:09 AM UTC

around this cylindrical structure. The lamp ring fits into a base plate that is one end of the 25.4-cm inner diameter light chamber (Fig. 1a). Inside the light chamber, the interior walls and the surface of the base plate are covered with a thin aluminum sheet that was bead-blasted to reduce the specular component of the reflectivity, resulting in a diffuse surface. The light chamber is hermetically sealed using o-rings to maintain a constant value of reflectance and to ensure stability of the flux from the exit aperture. The o-rings also help protect the SQM from contamination by moisture, dust, and other environmental factors.

Facing the base plate that contains the lamp ring is a 3.2-mm-thick acrylic diffuser, 23.6 cm in diameter. The diffuser is 12.7 cm from the lamps ($d = 12.7$ cm). This gives a d/a value of 1.1 for the SQM. Although the ability of this optical element to scatter and transmit the incident flux from the lamps in a diffuse manner is important, the stability of the overall transmittance is the critical parameter given the way the SQM is used. Trials with other plastics and large pieces of opal glass indicated that the overall uniformity of the transmittance was important. After consultation with the ocean optics community, the material with the best resistance to degradation from ultraviolet flux was selected, Plexiglas® MC.[3] Using o-rings, a 25.4-cm-diameter, 0.8-cm-thick piece of BK7 plate glass was used to protect the acrylic diffuser from scratches.

No thermal analysis or modeling of the SQM was performed during the design phase; instead, a build-and-test approach was followed. The halogen lamps heated the SQM through conduction and radiation, and the variability of the light field was expected to be larger in the case of thermal nonequilibrium. To measure the thermal environment, several thermistors were installed in the SQM, one near the diffuser, one near the lamp ring, and one in the housing of the internal monitors. The thermistor leads are routed to the deck box via the lamp circuit board and the deck box connectors; the corresponding temperatures are recorded with a precision of 0.1°C. The overall temperature of the SQM can be set using the electrical heater and commercial control system. The platinum resistance temperature detector used for the control point is located near the midpoint of the heating element, which is a nichrome heater coil.

b. Internal monitors

The temporal stability of the flux from the SQM is monitored using the three independent monitors that view the lamp side of the acrylic diffuser. Each of these internal monitors consists of a field-of-view limiting aperture, two or three colored-glass filters, a silicon photodiode, and a transimpedance amplifier. The three amplifiers are on a single circuit board and conform to the NIST specifications that were developed for detector metrology (Eppeldauer 1991). This common design, which converts photocurrent to voltage using an operation amplifier and feedback resistor, has been optimized for standards research by the choice of components and the assembly process.

TABLE 4. Specifications of the internal monitors in the SQM.

SQM monitor	Field of view	Photodiode*	Filters**	Feedback resistor	Typical signal, eight 1-A lamps
Blue	8.5°	S1337	BG28, BG12	100 MΩ	70 mV
Red	8.5°	S1337	KG5, OG590, BG38	10 MΩ	50 mV
White	8.5°	S1337	KG5, BG38	10 MΩ	120 mV

* S1337 is a model number from Hamamatsu.
** Filter designations refer to Schott product numbers.

The internal monitors, each with a different spectral responsivity, are used in the SQM to provide independent data on the temporal evolution of the radiant flux (section 3). One broadband monitor, denoted *white*, has a responsivity from about 325 to 800 nm; the second, denoted *blue*, has a responsivity from about 325 to 525 nm; and the third, denoted *red*, has a responsivity from about 575 to 800 nm. The white monitor is sensitive to changes in the total radiance of the SQM, while the red and blue monitors provide information on any gross changes as a function of wavelength since it is expected that the flux in the blue spectral region will degrade before the flux at longer wavelengths. The specifics for each monitor are given in Table 4 and an estimate of the responsivities, which are based on typical data given by the manufacturer, are shown in Fig. 4. The responsivity is the product of the filter transmittance and the spectral responsivity of the silicon photodiode.

As mentioned in section 2, the internal monitors are held at a fixed temperature using the TEC element, calibrated thermistor, and commercial temperature controller (model LDT 5910B from ILX Lightwave). The operating temperature of 35°C was chosen to be commensurate with the anticipated thermal environment of the SQM. The heating from the lamps, the internal SQM heater, or the environmental conditions were expected to result in an equilibrium temperature for the SQM between 30° and 35°C (this value is much higher if the fan is not used). To minimize the electrical noise from the temperature control circuit and to ensure that the temperature control system has adequate capacity to maintain the desired temperature in all field environments, the operating temperature should be close to the equilibrium temperature. Selection of a lower value—for example, 20°C—could lie above the highest dewpoint encountered in the field, resulting in condensation on the filters or detectors. Consequently, 35°C was chosen as the operational temperature. Another temperature

[3] Plexiglas is a registered trademark of Rohm and Haas and is under license to AtoHaas.

Unauthenticated | Downloaded 04/27/26 02:09 AM UTC

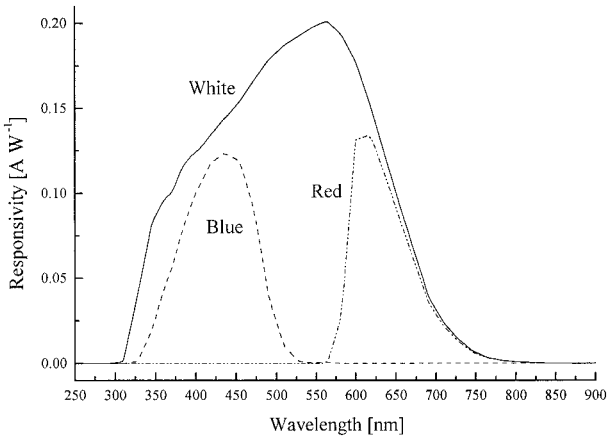

FIG. 4. Responsivity of the three internal SQM monitors. The values plotted are the product of the external transmittance of the glass filters at 25°C corresponding to the thickness of the filters used in the SQM and the typical spectral responsivity of the S1337 silicon photodiode from Hamamatsu. The responsivity for the blue radiometer is shown using a dashed line, the red radiometer with a dash–dot–dot line, and the white radiometer with a solid line. The Schott filter combinations in the internal monitors are KG 5 and BG 38 (white); BG 28 and BG 12 (blue); and KG 5, OG 590, and BG 38 (red).

could be used, but then a record of device performance should be established at this new temperature.

The dc fan was added to the SQM based on initial testing with all 16 lamps on, and the SQM operating in an air-conditioned laboratory environment at 22°C, the temperature near the lamp ring was about 60°C. This is above the allowable operating temperature for the silicon photodiodes, as well as being a safety hazard. The cooling subassembly consists of a housing constructed of rolled and welded aluminum that mounts to existing points on the back plate subassembly. The housing surrounds this subassembly, and air flows in through an opening on one side of the housing and out through the fan, reducing the equilibrium temperature to the range of values mentioned above.

c. *Mounting assembly*

A mounting assembly, customized for the field radiometers, is fitted to the exit aperture of the SQM. The mounting assembly consists of an adaptor plate for the DUT and a cylindrical *shadow collar* that fits between the SQM and the adapter plate. The purpose of the mounting assembly is to fix the position of the radiometer with respect to all six degrees of freedom. A D-shaped collar must be attached to each DUT as part of the kinematic design. Using a special jig, this collar is positioned a prescribed distance from the front of the DUT, and the flat part of the collar is positioned at a particular azimuthal location (using a reference point on the DUT). For maximum repeatability during field experiments, the D-shaped collar is left in place and must accommodate the mounting hardware used to fix the field instrument to the deployment packages. The DUT is held in the adapter plate of the mounting assembly in a cylindrical opening, which is the correct diameter for the particular DUT. The center hole has a flat surface, a step in the thickness, and three locking cams that hold the D-shaped collar securely to the adapter plate. This black anodized aluminum plate is attached to the front aperture of the SQM using nylon spacers and the aluminum shadow collar, which is painted black. The adapter plate attaches to the SQM using an asymmetric bolt pattern so that the azimuthal orientation is consistent. Different DUTs have different mounting assemblies but, in general, a large number of radiometers can be accommodated by a single unit since a class of DUTs usually has the same outside diameter. For long field radiometers (greater than about 40 cm), a V block, which is mounted to the SQM mounting plate, provides additional support and ensures kinematic placement. The overall design of the mounting assembly is flexible and robust with the combination of the mechanical components providing complete kinematic placement and elimination of stray light from the environment.

d. *Electronics*

The SQM electronics are separated into two parts: the system electronics and the deck box. The control systems for the lamp currents, TEC, and SQM heater, as well as the lamp timer circuit, a laptop personal computer (PC), the power supply for the SQM internal monitors, the power supply for the dc fan, the power supplies for the lamps, and a digital multimeter compose the system electronics (Fig. 3). These systems are mounted in a shipping rack, that is, a rack built into a shipping case. The rack is shock mounted inside the case to minimize the vibration and shock associated with transport. Five cables are used to connect these system electronics to the SQM via a rack-mounted panel containing the proper connectors. The cables are approximately 23 m long, which permit the SQM to be used remotely from the control electronics. This is particularly convenient on the ship since it permits the electronics to be protected from the environment while the SQM is used on deck.

As an engineering unit, provision was made to record additional parameters that may not be necessary after sufficient field experiments have taken place. The temperatures of the three SQM thermistors and the voltages across the 16 lamps are measured using the deck box (shown in the photograph in Fig. 1b). Inputs to the deck box are the lamp voltages and the thermistor resistances from the SQM; the cable associated with these signals is labeled in Fig. 1a. The temperatures are determined using a commercial resistance-to-temperature analog converter, and the lamp voltages are determined using a hand-held digital multimeter.

Unauthenticated | Downloaded 04/27/26 02:09 AM UTC

5. Control system and operation

The design of the SQM lamp control logic is similar to the automated current control of standard lamps described by Walker and Thompson (1994). Following this method, the currents to the two sets of lamps are provided by two stabilized precision current sources, and each lamp current is monitored by measuring the voltage across a 0.5Ω, shunt resistor (Fig. 3a). The calculated current is used by the computer to adjust the output of the current source using an external programming voltage. With this high-precision voltage monitoring and control feedback system, the current stability is between 10 and 30 μA.

The current sources are two HP model 6030A power supplies operated in the voltage programming mode. The power supply control voltages are generated with a 16-bit D/A board installed in the expansion chassis of the PC. The voltages across the two shunt resistors are measured by a 6.5-digit HP model 3457A digital multimeter (DMM) with an eight-channel multiplexer. The shunt voltages are communicated to the PC using the General-Purpose Interface Bus (GPIB). The DMM and the power supplies have built-in interfaces; the PC GPIB capability is provided through the use of an interface card (National Instruments model NI-488.2) installed in the expansion chassis of the PC.

To minimize the stress of current changes on the lamps, the lamps are powered up and down through the use of a linear ramp—that is, the power is increased or decreased incrementally until the current reaches the desired value in the desired amount of time. The ramp time periods are approximately 1 and 3 min for the low and high current lamps, respectively. To keep track of the usage of the lamps, both lamp sets have an automated timer circuit to record lamp operating hours.

The lamp control components are only part of the SQM electronics; the remainder are shown in Fig. 3b. The temperatures of the shunt resistors are monitored by two thermistors because the resistance is a function of temperature. The resistances of the thermistors are digitized by the DMM and communicated to the PC over the GPIB. The derived thermistor temperatures can be used to correct the shunt voltages if they are operated in circumstances where this is required. The DMM is also used to measure the signals of the three SQM internal monitors, which are also communicated to the PC using the GPIB interface.

All data logging takes place on the PC. Each sampling of the seven DMM channels (two shunt voltages, three photodiode voltages, and two thermistor resistances) is assigned a sequence number, time stamped, formatted into a text string, and then logged to disk in a text file. When the file is first opened, text descriptive information (headers) is written to the file to record the parameters of the SQM and any other information the operator deems important. Each data string is appended to the file, which minimizes the amount of time the file is open and thereby reduces the chance of file corruption in the event of a computer malfunction.

The primary concern associated with the operation of the SQM is to implement a set of procedures that maximize the stability and repeatability of the system and, hence, minimize the uncertainty of the measurements. Many design aspects of the total system were included or modified in an ongoing effort to ensure that the data collected are of the highest quality possible for field measurements. If these design elements are to be effective, the intended procedures associated with their use must be followed. An initial operational procedure was developed based on experience with similar components used in other radiometric systems. The following procedure was finalized during the AMT-3 cruise, where the SQM was used with 12 field radiometers.

1) Turn on the lamp power supplies, the DMM, the SQM fan, the SQM internal monitors, and the TEC 1–2 h before starting the measurements;
2) Log the starting number of hours on each lamp set;
3) Preheat the SQM for approximately 30–60 min using the internal electrical heater;
4) Ramp up the lamps to the selected lamp level and wait approximately 1–2 h for the SQM to warm up;
5) Make the initial measurements with the SQM fiducials, resulting in a set of SQM monitor voltages;
6) Make sequential measurements with all of the field radiometers, with one of the fiducials selected for measurement in between each radiometer, resulting in sets of SQM monitor voltages corresponding to the use of the fiducial or the field radiometers (record the field radiometer data using its data acquisition system);
7) Make the final measurements with the SQM fiducials;
8) For changes in the SQM lamp level, repeat steps 4–7 at the new lamp level (a 1-h warmup should be sufficient because the SQM was in use); and
9) Turn off the SQM (ramp down the lamps).

The deck box was made for the express purpose of obtaining additional engineering data (lamp voltages and internal temperatures) concerning the operation of the SQM. These data are collected during SQM warmup every 10 min and subsequently during the measurement of a DUT. The data collected by the PC and the deck box during the warm-up interval give a good indication of when the SQM reaches stable operation; this is expressed as a decrease in the variation of the internal monitor voltages followed by the thermistor resistances.

6. Performance

The SQM was first used in the field during SIRREX-5 (July 1996). Preliminary information was gathered on the time to reach thermal equilibrium, the utility of the fiducials, and the stability of the internal monitors and several field radiometers over a 4-day interval (Shaw et

Unauthenticated | Downloaded 04/27/26 02:09 AM UTC

al. 1997). In September 1996, the SQM system was shipped to Plymouth Marine Laboratory, in Plymouth, United Kingdom, for participation in the AMT-3 cruise. Results from SIRREX-5 and AMT-3 are described below and are summarized in Tables 1 and 2, but more details are given by Shaw et al. (1997) and Hooker and Aiken (1998).

Figure 5 shows the radiance uniformity of a laboratory model of the SQM as measured with the SeaWiFS Transfer Radiometer (SXR) at 412 and 548 nm (Johnson et al. 1996). A 2% uniformity was achieved within the central area with a diameter of 15 cm. A complete characterization of the radiance uniformity of the SQM has not been done but, as mentioned above, a detailed characterization is not required with the calibration methodology that incorporates the SQM as a stability monitor or a transfer source for the absolute calibration.

Use of an NIST-calibrated transfer radiometer, such as the SXR, would also determine the spectral radiance at six wavelengths that are close to those of the SeaWiFS instrument (Hooker and Esaias 1993); but, again, this has not been done for the present configuration of the SQM. Instead, the spectral radiance of the SQM, as measured during AMT-3, is reported in Fig. 6a and Table 1, using a field radiometer calibrated by the manufacturer (model OCR-1000 serial number 16). The low power lamp set was in use, resulting in a spectral radiance at 488 nm of about 0.11 μW cm^{-2} sr^{-1} nm^{-1}. The estimated value for 16 lamps is 1 μW cm $^{-2}$ sr^{-1} nm^{-1}, which is about 66% of the design value (Table 1). Figure 6a also describes the spectral radiance of the SQM with wavelength, as measured by the OCR-1000. The solid line is a fit to the data using a modified version of Planck's law that accounts for departures from this model using a polynomial:

$$\Phi(\lambda) \propto (a_0 + a_1\lambda + a_2\lambda^2 + a_3\lambda^3)\frac{e^{b/\lambda}}{\lambda^5}, \qquad (2)$$

where Φ is the radiant flux measured by the OCR-1000 and the coefficients of the model were determined by a nonlinear least squares fit to these data. The coefficient b corresponds to an apparent blackbody temperature, which is equal to 2300 K for these measurements.

The corresponding analysis for an irradiance sensor, model OCI-1000 serial number 23, is shown in Fig. 6b, where the values plotted are irradiances of the SQM as measured by the OCI-1000. Fitting the OCI-1000 data to the model represented by Eq. (2) results in a value for b that corresponds to a blackbody with an apparent temperature of 2390 K.

The stability of the radiometric flux from the SQM, as measured at NIST using the internal monitors, is reported in Table 1. The stability of the SQM during a single operation session was determined by calculating the average and standard deviation of the signals from the internal monitors for each session; the relative stability in Table 1 is the average of the individual relative standard deviations. The repeatability of the flux from one session to the next was calculated from the standard deviation of the average signals for each operating session. The values in Table 1 are for the blue internal monitor, the glass fiducial, and the SQM operating with eight 1-A lamps. Data were acquired at NIST in August

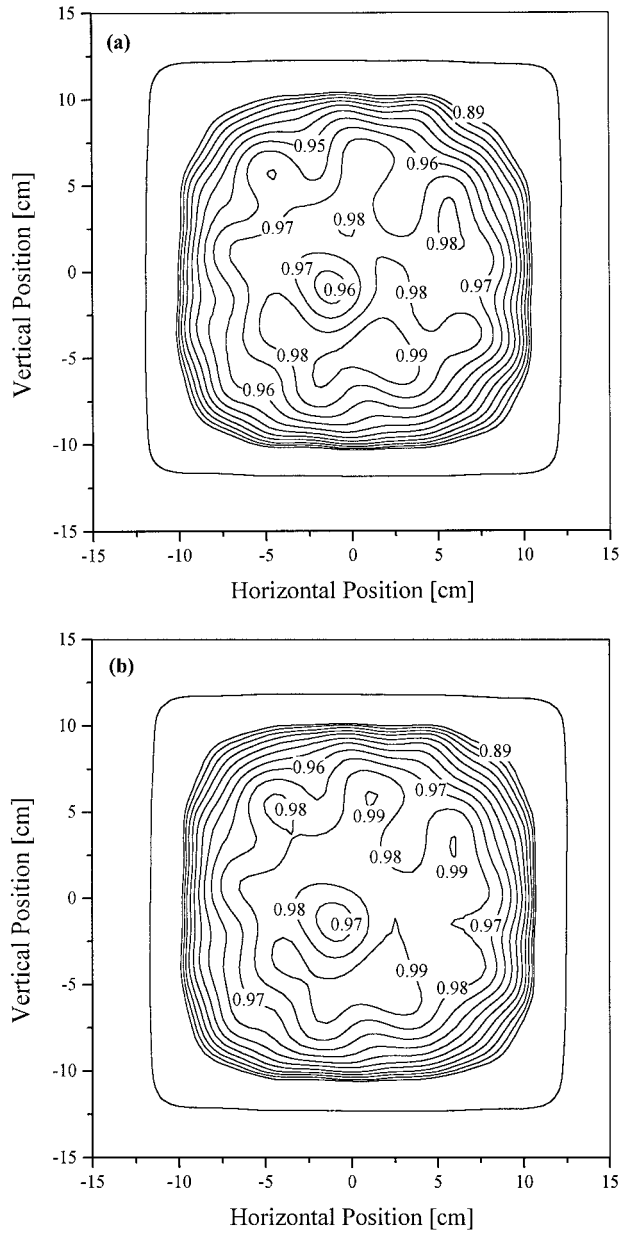

FIG. 5. Spatial uniformity of the spectral radiance of a laboratory model of the SQM with eight lamps as measured by the SXR at (a) 412 nm with a spatial resolution of 0.3 cm and (b) 548 nm with a spatial resolution of 0.5 cm. In both cases, the area measured by the SXR was about 4.5 cm. The data have been normalized to the maximum value of the spectral radiance, and these normalized values are indicated next to the appropriate contour. The location of the lamps is evident, and the axial symmetry is not as uniform as predicted by the simple model.

Unauthenticated | Downloaded 04/27/26 02:09 AM UTC

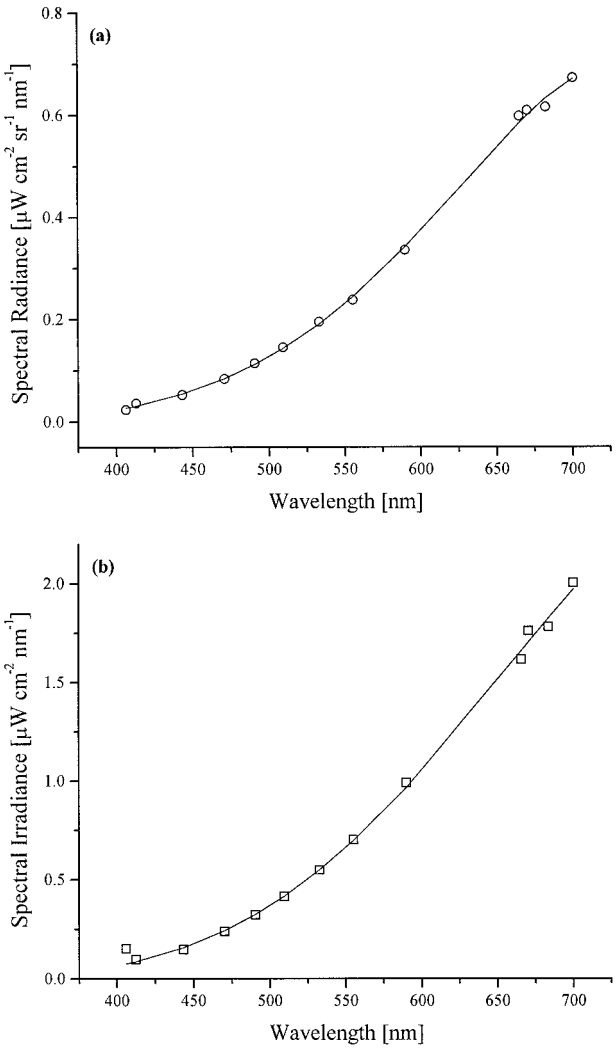

FIG. 6. The output of the SQM as measured by two ocean color radiometers, which were calibrated by the manufacturer Satlantic, Inc. (a) The spectral radiance measured by a 13-channel instrument, OCR-1000 serial number 16, is given by the circles, and the fit to the data is given by the solid line. (b) The spectral irradiance measured by a 13-channel instrument, OCI-1000 serial number 23, is given by the squares, and the fit to the data is given by the solid line.

1996 over a 4-day interval; on each day the glass and the white fiducial were measured once.

During AMT-3, in September and October 1996, data were acquired over a 36-day interval, and the glass fiducial was used from 1 to 12 times during each SQM operating session; the white and black fiducials were used once during most sessions. The results for the blue monitor, the glass fiducial, and the eight 1-A lamps are given in Table 1. The stabilities in Table 1 were calculated as for the NIST data with the multiple measurement sets with the glass fiducial during one session treated as a single realization. Values for other combinations of the monitor and fiducial data show similar results. Of particular interest are the results acquired in the laboratory or while the ship was in port; for these data, the relative standard deviation of the internal monitor data is about 20 times smaller compared to the results when the ship was under way.

7. Discussion and conclusions

A portable field source of radiant flux that is suitable for general field use in support of SeaWiFS calibration and validation was designed, constructed, and tested. This large-area source is simple in construction, compact, portable, and suitable for monitoring radiometer performance during a field experiment. The stability, as evaluated using the internal monitors, is within the design specification. The increased standard deviations in the monitor data when the ship is under way could be caused by vibration of the lamp filaments caused by the ship's motion. To test this hypothesis, methods of vibration isolation for the SQM will be implemented in the future. Another factor could be the operation of the internal heater, which was not optimized during AMT-3. Also, after AMT-3, the dc fan was modified for operation at three speeds. Future use of the heater and fan combination is expected to result in optimal thermal performance for the entire range of ambient temperatures.

Several field radiometers were used in AMT-3, and the stability and repeatability of these instruments is described fully in the companion paper (Hooker and Aiken 1998). The results show the SQM quantifies the stability of field radiometers with a precision of better than 1%. For AMT-3, the SQM established that daily measurements using the SQM and a complement of field sensors greatly increased the confidence of the field measurements and provided essential data for modeling the temporal behavior of particular radiometers.

A design oversight in the SQM is the lack of a shutter to measure the amplifier offset voltage of the internal monitors, so that the net monitor signal is not known. This oversight was exacerbated by the software, which did not allow for automated monitoring and storing of the signals from the internal monitors to an electronic file unless the lamps were turned on. A software revision, after AMT-3, made a provision for recording these offset signals independent of the status of the lamps.

The long-term stability of the flux from the SQM depends on the performance of the lamps, the reflectance of the inner surfaces of the light chamber, and the transmittance of the acrylic diffuser and the glass window. For example, ultraviolet radiation from the lamps and external sources will alter these material properties. The repeatability of the output from one measurement session to the next depends on the environmental conditions. In particular, the resistance of the shunt resistor in the lamp control circuit depends on temperature, which varies during the field experiment. The software could be modified to account for this effect, but the resistance as a function of temperature would have to

Unauthenticated | Downloaded 04/27/26 02:09 AM UTC

be measured for the shunt resistors with an accuracy commensurate with the sensitivity to this effect; this has not been done.

The long-term stability of the internal monitors depends on the temporal performance of the glass filters and the silicon photodiodes. Repeat measurements of the absolute spectral responsivity of the monitors, separated by a suitable time interval, could be used to provide information on the temporal behavior of these units. The day-to-day repeatability is also a function of the environmental conditions: the amplifiers are not temperature stabilized and there are systematic effects with the electronics that depend on temperature.

During AMT-3, based on the numerous sessions using the eight 1-A lamps, a stepwise, 0.6% change in the radiometric flux was measured by the three internal monitors and the glass fiducial. The change is attributed to a stepwise shift in the voltage of one of the 1-A lamps. For almost all of the results, the three internal monitors are internally consistent. This implies that the spectral shape of the source has remained constant and indicates that the cost of the SQM could be reduced by using only one internal monitor, not three.

The development of the SQM as an absolute calibrator for spectral radiance warrants further investigation. If achieved, it would serve as an attractive alternative to integrating sphere sources and large-area plaques that are illuminated with spectral irradiance standard lamps. Both of these systems are large and difficult to implement in the field. More information should be recorded on the Lambertian quality of the SQM—that is, the spectral radiance should be measured as a function of viewing angle and spatial position on the exit aperture.

The use of the SQM as an irradiance standard also should be investigated. The irradiance could be determined using the two-aperture method (Johnson et al. 1996). For accurate measurements with the DUTs, the cosine response would have to be known accurately over all angles filled by the flux from the SQM. The uncertainty introduced by the requirement to place an irradiance sensor a known distance from the source would have to be evaluated.

For absolute radiance or irradiance measurements, the effect of the interreflections on the SQM's spectral radiance must be quantified, and calibration methodologies that support absolute measurement need to be investigated. For example, increasing the distance between the DUT and the SQM would reduce the magnitude of the interreflections because the geometric configuration factor for the two apertures (SQM exit and the DUT entrance) would be smaller. However, the SQM system would no longer be compact. The general solution involves the development of a model to predict the dependence of the internal monitor signals in terms of the system parameters, such as the optical properties of the SQM exit aperture, the reflectance of the DUT front surface, and the geometric configuration factor. These values would have to be known, and the model substantiated with ancillary measurements, in order to apply any corrections for the effect of the interreflections on the SQM's spectral radiance. A simple model that treats the SQM acrylic diffuser and glass window as a Lambertian scatterer with no absorption and finite reflectance has been suggested (C. Cromer 1997, personal communication). Finally, the effect of reflections from the inside of the light-tight kinematic DUT mounting assembly must also be examined and suitable baffle designs implemented if necessary.

The magnitude of the flux from the SQM was not optimized for the radiometers encountered on AMT-3. The flux at the shorter measurement wavelengths was inadequate with the low power lamps, but when the eight 3-A lamps were used instead, some channels in the red spectral region for the field radiometers saturated. The ultraviolet output could be improved by operating the lamps closer to the maximum current or changing the optical components in the SQM (e.g., replacing the BK7 glass window with one constructed from quartz or sapphire). The internal aluminum parts could be anodized to result in a blue color, which may also increase the flux at these wavelengths. Different lamps or illumination geometries that may result in greater radiometric efficiency should be investigated. Other variables to consider include the use of internal lamp baffles and protecting the acrylic diffuser from the ultraviolet radiation from the lamps.

The SQM appears to have potential for use in other radiometric field experiments, not just oceanography. Examples include semipermanent underwater radiometers, such as those associated with buoys and platforms, aircraft instruments, and radiometers designed to measure land reflectance. Remote sensing using optical instruments is a broad field that covers many areas of science, surveillance, and environmental technology, and there is a need for accurately monitoring the performance of instruments in all of these endeavors.

Acknowledgments. The authors are grateful for useful discussions with Christopher Cromer, Chuck McClain, Georg Sauter, and Scott McLean. Jim Mueller explained the prior use of a small field source, without any internal monitors or computer control, developed by the VIS/LAB at the Scripps Institution of Oceanography. Bob Saunders provided useful insight into the data acquisition software. Elaine Firestone provided valuable editorial assistance. This work was supported in part by the SeaWiFS Project Office via a Military Interdepartmental Purchase Request to NIST (S-64096-E).

REFERENCES

Early, E. A., and A. Thompson, 1996: Irradiance of horizontal quartz-halogen standard lamps. *J. Res. Natl. Inst. Stand Technol.,* **101,** 141–153.

Eppeldauer, G., 1991: Temperature monitored/controlled silicon photodiodes for standardization. *Proc. SPIE,* **1479,** 71–77.

Unauthenticated | Downloaded 04/27/26 02:09 AM UTC

Evans, R. H., and H. R. Gordon, 1994: CZCS ''system calibration'': A retrospective examination. *J. Geophys. Res.,* **99,** 7293–7307.

Hooker, S. B., and W. E. Esaias, 1993: An overview of the SeaWiFS project. *Eos, Trans. Amer. Geophys. Union,* **74,** 241–246.

——, and J. Aiken, 1998: Calibration evaluation and radiometric testing of field radiometers with the SeaWiFS Quality Monitor (SQM). *J. Atmos. Oceanic Technol.,* **15,** 995–1007.

——, C. R. McClain, and A. Holmes, 1993: Ocean color imaging: CZCS to SeaWiFS. *Mar. Tech. Soc. J.,* **27,** 3–15.

Johnson, B. C., S. S. Bruce, E. A. Early, J. M. Houston, T. R. O'Brian, A. Thompson, S. B. Hooker, and J. L. Mueller, 1996: The Fourth SeaWiFS Intercalibration Round-Robin Experiment (SIRREX-4), May 1995. NASA Tech. Memo. 104566, Vol. 37, 65 pp. [Available from NASA/Goddard Space Flight Center, Greenbelt, MD 20771.]

McClain, C. R., W. E. Esaias, W. Barnes, B. Guenther, D. Endres, S. B. Hooker, G. Mitchell, and R. Barnes, 1992: Calibration and validation plan for SeaWiFS. NASA Tech. Memo. 104566, Vol. 3, 41 pp. [Available from NASA/Goddard Space Flight Center, Greenbelt, MD 20771.]

Mueller, J. L., and R. W. Austin, 1995: Ocean optics protocols for SeaWiFS validation, revision 1. NASA Tech. Memo. 104566, Vol. 25, 66 pp. [Available from NASA/Goddard Space Flight Center, Greenbelt, MD 20771.]

Shaw, P.-S., B. C. Johnson, S. B. Hooker, and D. Lynch, 1997: The SeaWiFS quality monitor—A portable field calibrator light source. *Proc. SPIE,* **2963,** 772–776.

Taylor, B. N., and C. E. Kuyatt, 1994: Guidelines for evaluating and expressing the uncertainty of NIST measurement results. NIST Tech. Note 1297, 1994 ed., 20 pp. [Available from National Institute of Standards and Technology, Gaithersburg, MD 20899.]

Walker, J. H., and A. Thompson, 1994: Improved automated current control for standard lamps. *J. Res. NIST,* **99,** 255–261.

Unauthenticated | Downloaded 04/27/26 02:09 AM UTC